Preliminary Examination: Electricity and Magnetism

Department of Physics and Astronomy
University of New Mexico
Winter 2008

Instructions:

- *the exam consists of 10 problems, 10 points each;*
- *partial credit will be given if merited;*
- *personal notes on two sides of* 8×11 *page are allowed;*
- *total time is 3 hours.*

---

1. Two charges $+q, -q$ are separated by a distance d. Define coordinates as in the figure. Find the potential $V(x, y)$ at any point in the x, y plane.

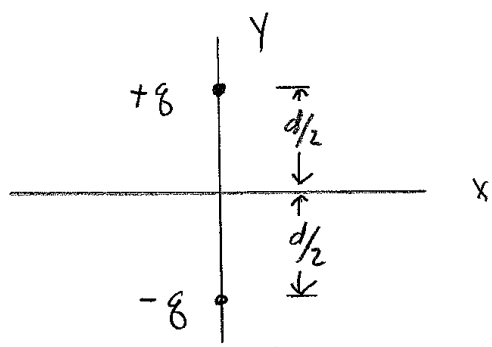

2. A point charge q is held at a distance h above an infinite conducting sheet. Determine the surface charge density on the sheet.
3. Consider two capacitors of identical construction except one is filled with dielectric having $K = 2$ (capacitor a) and the second is filled with air $K \approx 1$ (capacitor b). Initially, switch one is closed and two is open so that capacitor a has an initial charge q_0. Subsequently, switch one is open and switch two is closed, so that the capacitors are connected in parallel What are the charges on q_a, q_b on the capacitors when connected in parallel?

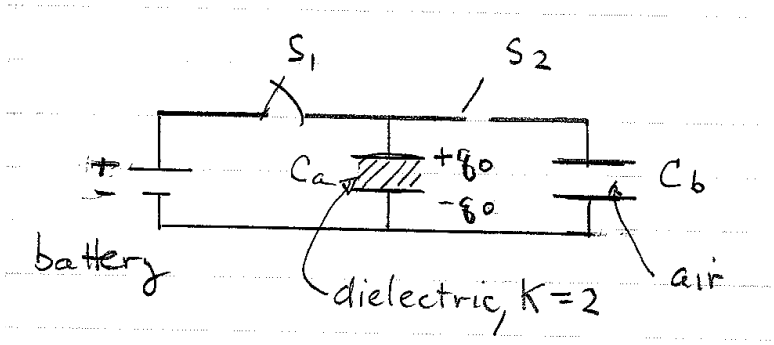

4. An electron (mass m, charge $-e$) moves between two parallel plates, where the plates have a potential difference V and separation d. Between the plates there is also magnetic field B (into the page as shown in the figure). The electron starts at rest and follows the trajectory indicated in the sketch– after almost reaching the distance d in y, the particle will continue to move parallel to the upper plate with constant velocity in the x direction. Find the magnitude of the magnetic field B.

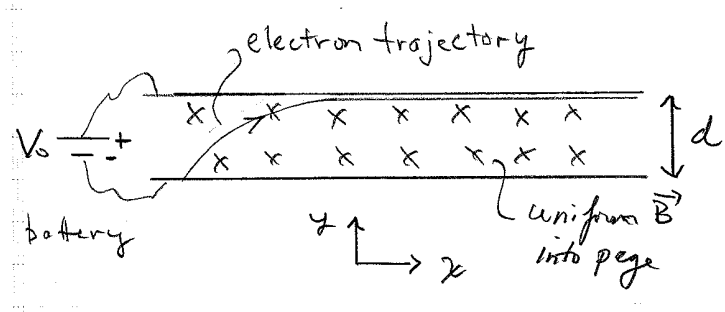

5. Consider the circuit in the figure with values $V_0 = 12$V, $R_1 = 200k\Omega$,$R_2 = 300k\Omega$, and $C = 2\mu F$. The switch is open after having been closed for a very long time.
a) What is the voltage on the the capacitor just before the switch is opened?
b) After how much time (in seconds) does the voltmeter read 3V?

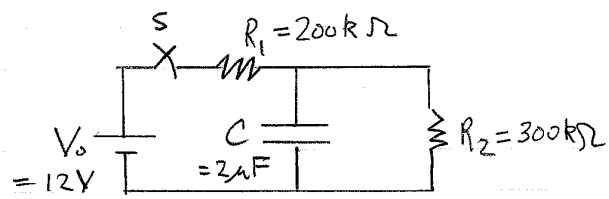

6. Consider a square loop of wire (with side length d) oriented parallel to a long straight wire carrying current I. The loop is pulled with constant speed v in a direction perpendicular to the wire.
a) What is the induced EMF in the loop?
b)What is the direction of the induced current? Indicate on the figure with an arrow.

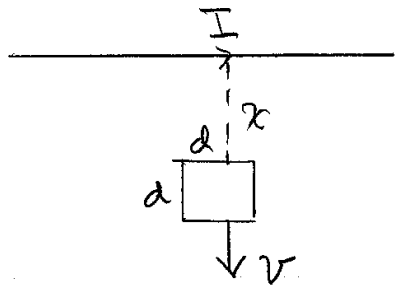

7. A plane EM wave of angular frequency ω propagates through a material with index of refraction n_1. The wave is normally incident upon the surface interface with another material with index of refraction n_2. What fraction of the incident wave energy is reflected from the surface?
8. A straight metal wire of conductivity σ and radius a carries a steady current I.
   a. Determine the Poynting vector as a function of the distance from the center of the wire.
   b. Integrate the normal component of the Poynting vector over the surface of the wire and compare to the power loss per unit length due to the resistance of the wire.

9. Write Maxwell's equations for a plane EM wave propagating in a neutral, conducting medium having permeability μ, permittivity ϵ and conductivity σ. Show that the wave equation for the electric field is given by

$$\vec{\nabla}^2 \vec{E} = \mu\epsilon \frac{\partial^2}{\partial t^2}\vec{E} + \mu\sigma \frac{\partial}{\partial t}\vec{E}.$$

10. a) Find the dispersion relation (equation relating the wave number k to the angular frequency ω) for a plane wave of angular frequency ω propagating in a neutral, conducting medium (see previous problem). Note that in this case k is a complex number.
    b) For $\sigma >> \omega$, find the skin depth in the medium.